Work Order ID 52826

October 15, 2009 10:39:01 AM

Item ID: D2989-043
Revision ID: D
Item Name: Basket Lid Assembly

Accept

Setup **Start**
Stop

Start Date: 15/10/2009 **Start Qty:** 1.00
Required Date: 29/10/2009 **Req'd Qty:** 1.00
Reference:

Cust Item ID:
Customer:

Run **Start**
Stop

Approvals: **Process Plan:** RL **Date:** 09-10-15 **Tooling:** _____ **Date:** _____
QC: _____ **Date:** _____ **SPC (Y/N):** _____ **Date:** _____

Sequence ID/ Work Center ID	Operation Description	Set Up/ Run Hours	Draw Number	Draw Rev.	Plan Code	Accept Qty	Reject Qty	Reject Number	Insp. Stamp
Draw Nbr	**Revision Nbr**								
D2989	Rev D								
100		0.00							
Large Fab	Large Fab								
Large Fab	**Memo**	0.00							
Large Fab	1- assemble all ribs in DT9446 jig, weld as per dwg D2989 2- tack weld mesh on basket as per dwg D2989 using DT9446 jig 3- to locate hinges and shims use D2989-041, weld as per dwg D2989 A/R ER316 S.S. Rod Batch: M1D9213								
110	QC9- Inspect visual per QSI004- Fusion Welds	0.00							
QC	**Memo**	0.00							
Quality Control									

SM 09/10/22 (1x)

PC 09 10 26

Work Order ID 52826

October 15, 2009 10:39:01 AM

Item ID: D2989-043
Revision ID: D
Item Name: Basket Lid Assembly

Accept

Setup Start
Stop

Start Date: 15/10/2009 **Start Qty:** 1.00
Required Date: 29/10/2009 **Req'd Qty:** 1.00
Reference:

Cust Item ID:
Customer:

Run Start
Stop

Approvals: **Process Plan:** _____ **Date:** _____ **Tooling:** _____ **Date:** _____
QC: _____ **Date:** _____ **SPC (Y/N):** _____ **Date:** _____

Sequence ID/ Work Center ID	Operation Description	Set Up/ Run Hours	Draw Number	Draw Rev.	Plan Code	Accept Qty	Reject Qty	Reject Number	Insp. Stamp
120	QC6- Inspect dimensions to drawing	0.00 => Scalcolz				10	0		
QC	Memo	0.00							
Quality Control									
130	White Gloss(Ref.4.3.5.2) per QSI005 4.3-Steel PRESSURE WASH	0.00 BR 09-10-27 ① .				X1	0		
Powdercoat	Memo	0.00 JM 09/10/27							
Powder Coating	1- Plug holes prior to powder coating M112260								

2-Powder Coat White (Ref. 4.3.5.2) D2989-041 as per QSI 005 4.3 & Dwg D2989

1ST COAT
START TIME: 1:45pm
OVEN TEMPERATURE: 400°F
FINISH TIME: 2:15pm
********** 2nd coat if necessary**********
2ND COAT:
START TIME: 2:45pm
OVEN TEMPERATURE: 400°F
FINISH TIME: 3:15pm

Work Order ID 52826

October 15, 2009 10:39:01 AM

Item ID: D2989-043
Revision ID: D
Item Name: Basket Lid Assembly

Accept

Setup Start
Stop

Start Date: 15/10/2009 **Start Qty:** 1.00
Required Date: 29/10/2009 **Req'd Qty:** 1.00
Reference:

Cust Item ID:
Customer:

Run Start
Stop

Approvals: **Process Plan:** _____ **Date:** _____ **Tooling:** _____ **Date:** _____
QC: _____ **Date:** _____ **SPC (Y/N):** _____ **Date:** _____

Sequence ID/ Work Center ID	Operation Description	Set Up/ Run Hours	Draw Number	Draw Rev.	Plan Code	Accept Qty	Reject Qty	Reject Number	Insp. Stamp
140 QC Quality Control	QC3- Inspect Part Finish Memo	0.00 0.00	BR 09-10-28			1.			
150 Packaging Packaging	Identify as per dwg & Stock Location: PRP 52819 Memo	0.00 0.00				Rec 9/10/25	1		
160 QC Quality Control	QC21- Final Inspection - Work Order Release Memo	0.00 0.00					09/10/30		

UMF 09-10-29

Picklist Print

October 15, 2009 10:39:20 AM

5

Work Order ID: 52826

Parent Item: D2989-043RevD

Parent Item Name: Basket Lid Assembly

Comments:

Start Date: 15/10/2009 **Required Date:** 29/10/2009

Start Qty: 1.00 **Required Qty:** 1.00

Component Item ID/ Item Name	Replacement Item ID	Mfg/ Purch	Bin Item	Primary Location	Last Location	Route Seq ID	Unit of Measure	Qty on Hand	Remaining Qty To Pick	Qty Issued	Date Issued	Status
D2221-1RevH		Manufactured	No			100	Each	17.0000	1.0000			
Rib												

✓

Warehouse Location	Loc Qty	Loc Code		
Main Warehouse				
ST	1			
48101	1			
Main Warehouse				
WA	16			
51250	4		1x	SG 09/10/21
51872	12			

D2989-3RevD		Manufactured	No			100	Each	3.0000	1.0000			
Rib												

✓

Warehouse Location	Loc Qty	Loc Code		
Main Warehouse				
ST	3			
50572	1		1x	SG 09/10/21
51341	2			

Picklist Print

October 15, 2009 10:39:20 AM

Work Order ID: 52826

Parent Item: D2989-043RevD

Parent Item Name: Basket Lid Assembly

Comments:

Start Date: 15/10/2009 **Required Date:** 29/10/2009

Start Qty: 1.00 **Required Qty:** 1.00

Component Item ID/ Item Name	Replacement Item ID	Mfg/ Purch	Bin Item	Primary Location	Last Location	Route Seq ID	Unit of Measure	Qty on Hand	Remaining Qty To Pick	Qty Issued	Date Issued	Status
D2989-4RevD		Manufactured	No			100	Each	3.0000	1.0000			
Rib												

Warehouse Location	Loc Qty	Loc Code
Main Warehouse		
ST	3	
50573	1	
51342	2	

1x SS 09/10/21

Component Item ID/ Item Name	Replacement Item ID	Mfg/ Purch	Bin Item	Primary Location	Last Location	Route Seq ID	Unit of Measure	Qty on Hand	Remaining Qty To Pick	Qty Issued	Date Issued	Status
D2989-5RevD		Manufactured	No			100	Each	8.0000	2.0000			
Rib												

Warehouse Location	Loc Qty	Loc Code
Main Warehouse		
ST	4	
48505	4	
Main Warehouse		
WA	4	
51873	4	

2x SS 09/10/21

Picklist Print

October 15, 2009 10:39:20 AM

Work Order ID: 52826

Parent Item: D2989-043RevD

Parent Item Name: Basket Lid Assembly

Comments:

Start Date: 15/10/2009 **Required Date:** 29/10/2009

Start Qty: 1.00 **Required Qty:** 1.00

Component Item ID/ Item Name	Replacement Item ID	Mfg/ Purch	Bin Item	Primary Location	Last Location	Route Seq ID	Unit of Measure	Qty on Hand	Remaining Qty To Pick	Qty Issued	Date Issued	Status
D3182-1RevA Hinge		Manufactured	No			100	Each	10.0000	2.0000			

Warehouse Location	Loc Qty	Loc Code
Main Warehouse		
ST	10	
48453	4	
51253	6	

2x SY 09/10/21

Component Item ID/ Item Name	Replacement Item ID	Mfg/ Purch	Bin Item	Primary Location	Last Location	Route Seq ID	Unit of Measure	Qty on Hand	Remaining Qty To Pick	Qty Issued	Date Issued	Status
D3442-3RevA Shim		Manufactured	No			100	Each	6.0000	2.0000			

Warehouse Location	Loc Qty	Loc Code
Main Warehouse		
ST	6	
42718	1	
48504	1	
51302	4	

1x 1x SY 09/10/21

Picklist Print

October 15, 2009 10:39:20 AM

Work Order ID: 52826

Parent Item: D2989-043RevD

Parent Item Name: Basket Lid Assembly

Comments:

Start Date: 15/10/2009 **Required Date:** 29/10/2009

Start Qty: 1.00 **Required Qty:** 1.00

Component Item ID/ Item Name	Replacement Item ID	Mfg/ Purch	Bin Item	Primary Location	Last Location	Route Seq ID	Unit of Measure	Qty on Hand	Remaining Qty To Pick	Qty Issued	Date Issued	Status
D3827-041RevA Rib Assembly (Inboard)		Manufactured	No			100	Each	7.0000	1.0000			

Warehouse Location	Loc Qty	Loc Code		
Main Warehouse				
ST	6			
51339	6		1x	SY 09/10/21
Main Warehouse				
WA	1			
51091	1			

Component Item ID/ Item Name	Replacement Item ID	Mfg/ Purch	Bin Item	Primary Location	Last Location	Route Seq ID	Unit of Measure	Qty on Hand	Remaining Qty To Pick	Qty Issued	Date Issued	Status
D3832-5RevA Mesh (Lid)		Manufactured	No			100	Each	6.0000	1.0000			

Warehouse Location	Loc Qty	Loc Code		
Main Warehouse				
ST	6			
50020	3		1x	SY 09/10/21
52049	3			

Picklist Print

October 15, 2009 10:39:20 AM

Work Order ID: 52826

Parent Item: D2989-043RevD

Parent Item Name: Basket Lid Assembly

Comments:

Start Date: 15/10/2009 **Required Date:** 29/10/2009

Start Qty: 1.00 **Required Qty:** 1.00

Component Item ID/ Item Name	Replacement Item ID	Mfg/ Purch	Bin Item	Primary Location	Last Location	Route Seq ID	Unit of Measure	Qty on Hand	Remaining Qty To Pick	Qty Issued	Date Issued	Status
D3833-5RevA Mesh (Lid End)		Manufactured	No			100	Each	14.0000	2.0000			
				Warehouse Location		**Loc Qty**		**Loc Code**				
				Main Warehouse								
				ST			14					
					51305		14			2x	SG 09/10/21	
D3838-041RevA Rib Assembly (Basket Lid, LH)		Manufactured	No			100	Each	3.0000	1.0000			
				Warehouse Location		**Loc Qty**		**Loc Code**				
				Main Warehouse								
				ST			3					
					50574		1			1x	SG 09/10/21	
					51334		2					
D3838-042RevA Rib Assembly (Basket Lid, RH)		Manufactured	No			100	Each	3.0000	1.0000			
				Warehouse Location		**Loc Qty**		**Loc Code**				
				Main Warehouse								
				ST			3					
					50575		1			1x	SG 09/10/21	
					51335		2					

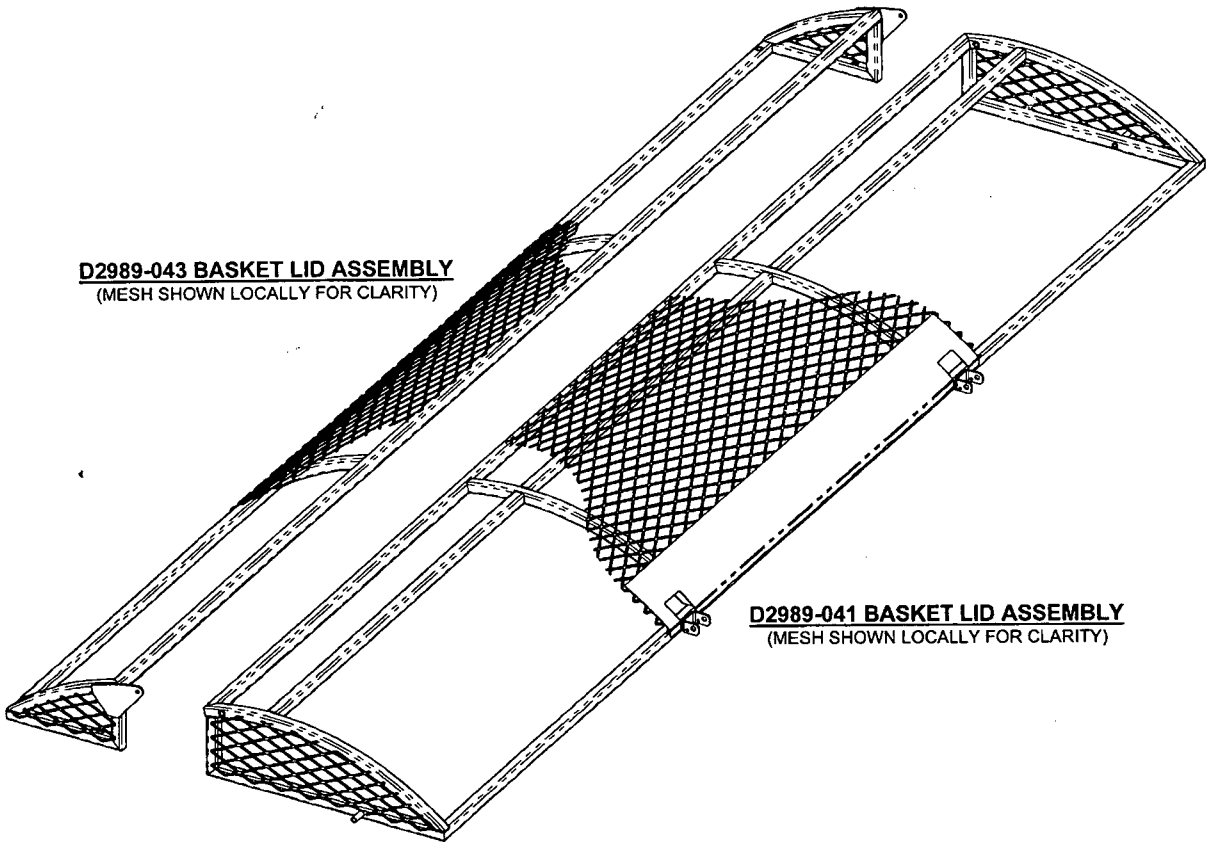

ITEM	QTY -041	QTY -043	P/N	DESCRIPTION
1	X		D2989-041	BASKET LID ASSEMBLY
2		X	D2989-043	BASKET LID ASSEMBLY
3	1		D2506	LABEL PLATE
4	1		D2512-7	RIB
5	2		D2581	MOUNTING BRACKET
6		1	D2989-3	RIB
7		1	D2989-4	RIB
8		2	D2989-5	RIB
9	2		D2989-13	RIB
10	2	1	D2989-17	RIB
11	2		D2989-19	RIB
12		2	D3182-1	HINGE
13		2	D3442-3	SHIM
14		1	D3827-041	RIB ASSY (INBOARD)
15	1		D3832-3	MESH, BASKET LID
16		1	D3832-5	MESH, BASKET LID
17	2		D3833-3	MESH, LID END
18		2	D3833-5	MESH, LID END
19	1		D3836-041	RIB ASSY (BASKET LID, LH)
20	1		D3836-042	RIB ASSY (BASKET LID, RH)
21		1	D3838-041	RIB ASSY (BASKET LID, LH)
22		1	D3838-042	RIB ASSY (BASKET LID, RH)
23	1		D3852-041	RIB ASSEMBLY
24	1		D3852-042	RIB ASSEMBLY

RELEASED 08/11/18 MB

SHOP COPY
RETURN TO
ENGINEERING
UNCONTROLLED COPY
SUBJECT TO AMENDMENT
WITHOUT NOTICE
WORK ORDER
NO. 52824
BP 09-10-15

REV.	DESCRIPTION	BY	DATE
D	REVISED -041/-043 PARTS LISTS AND ADDED "ITEM" COLUMN TO PARTS LIST (ZN D3-1); D3836-041 REPLACES D2989-9/-15; D3836-042 REPLACES D2989-10/-15; D3838-041 REPLACES D2989-1/-7; D3838-042 REPLACES D2989-2/-7; D3852-041 REPLACES D2989-11; D3852-042 REPLACES D2989-2; REMOVED D2327-3 (NOW INSTALLED ON D3836 DWG), D2989-9/-10 (NOW ON D3836 DWG), D2989-1/-2/-7/-15 (NOW ON D3838 DWG) AND D2989-11/-12 (NOW ON D3852 DWG). REASON: TO SATISFY "LEAN MANUFACTURING" PROGRAM	MB	08.09.24
C	FRAME MATERIAL WAS 0.060 WALL; MESH MATERIAL UPDATED; DRAWING TRANSFERED TO "B" FORMAT AND CURRENT DRAFTING STANDARD	AJS	08.06.20
B	ADD SHIM UNDER HINGES, UPDATE LID DIMENSIONS	PH	05.06.07
A	NEW ISSUE	DS	00.10.27

DESIGN	DS	**DART AEROSPACE LTD** HAWKESBURY, ONTARIO, CANADA
DRAWN		
CHECKED	AJS	DRAWING NO. D2989 — REV. D — SHEET 1 OF 5
MFG. APPR.		
APPROVED		TITLE: BASKET LID ASSEMBLY — SCALE: NTS
DE APPR.		
DATE	08.09.24	

NOTES:
MATERIAL: N/A
FINISH: POWDER COAT WHITE (4.3.5.2) PER DART QSI 005 4.3
BLACK ANTI-SKID PAINT AS INDICATED PER DART QSI 005 4.4
SPRAY PAINT INSIDE SURFACE BLACK PRIOR TO APPLYING ANTI-SKID
TOLERANCES: PER DART QSI 018 UNLESS OTHERWISE NOTED
UNITS: INCHES UNLESS OTHERWISE NOTED
BREAK SHARP EDGES: 0.005 TO 0.010 MAX
IDENTIFICATION: N/A
WEIGHT: D2989-041 = 26.50 lbs; D2989-043 = 15.50 lbs
WELD PER DART QSI 004

SHOP COPY
RETURN TO
ENGINEERING
UNCONTROLLED COPY
SUBJECT TO AMENDMENT
WITHOUT NOTICE
WORK ORDER
NO. 52926

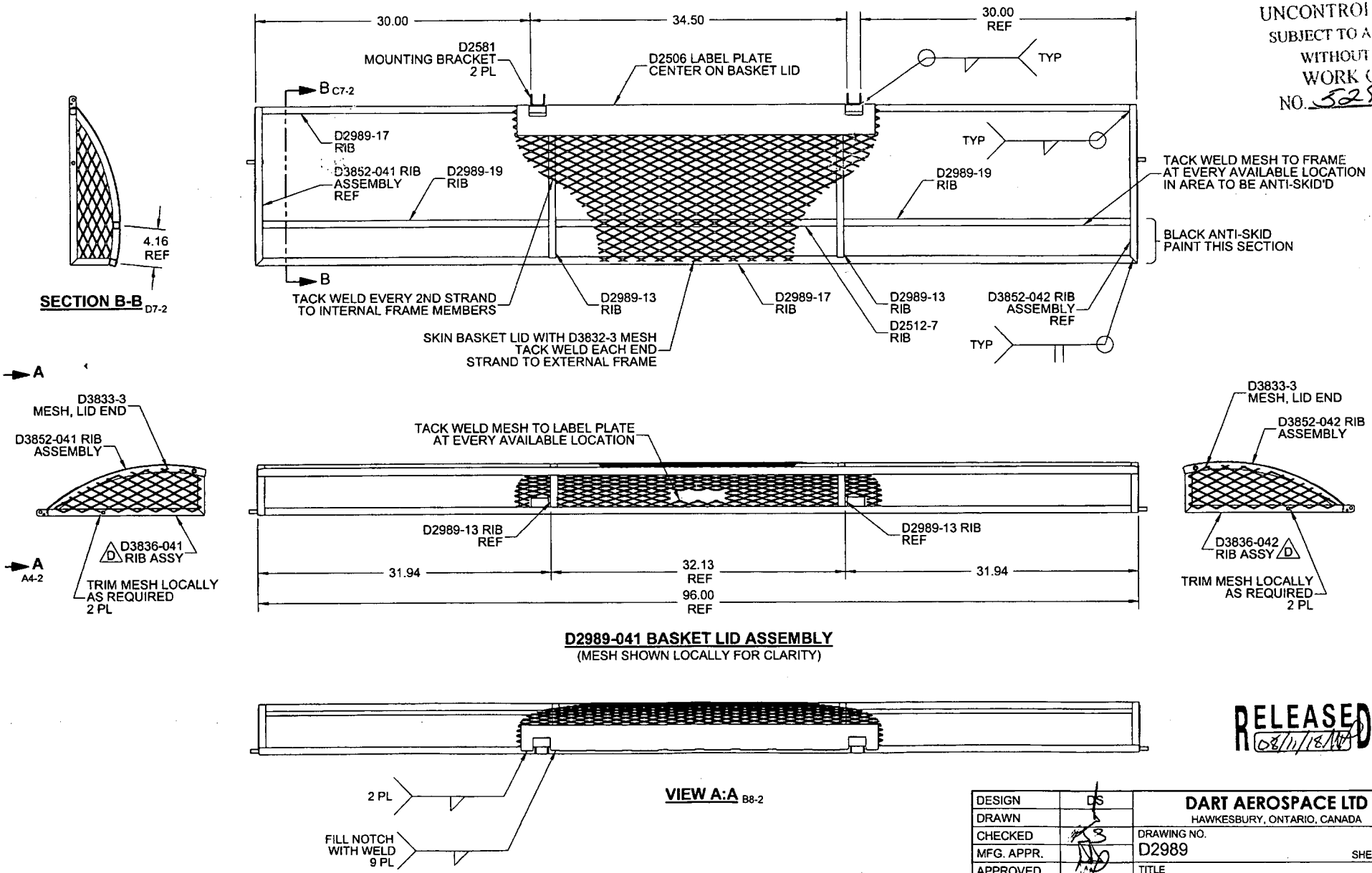

RELEASED 08/11/18

DESIGN	DS	DART AEROSPACE LTD HAWKESBURY, ONTARIO, CANADA
DRAWN		
CHECKED		DRAWING NO. D2989 — REV. D — SHEET 2 OF 5
MFG. APPR.		
APPROVED		TITLE: BASKET LID ASSEMBLY — SCALE: NTS
DE APPR.		
DATE	08.09.24	

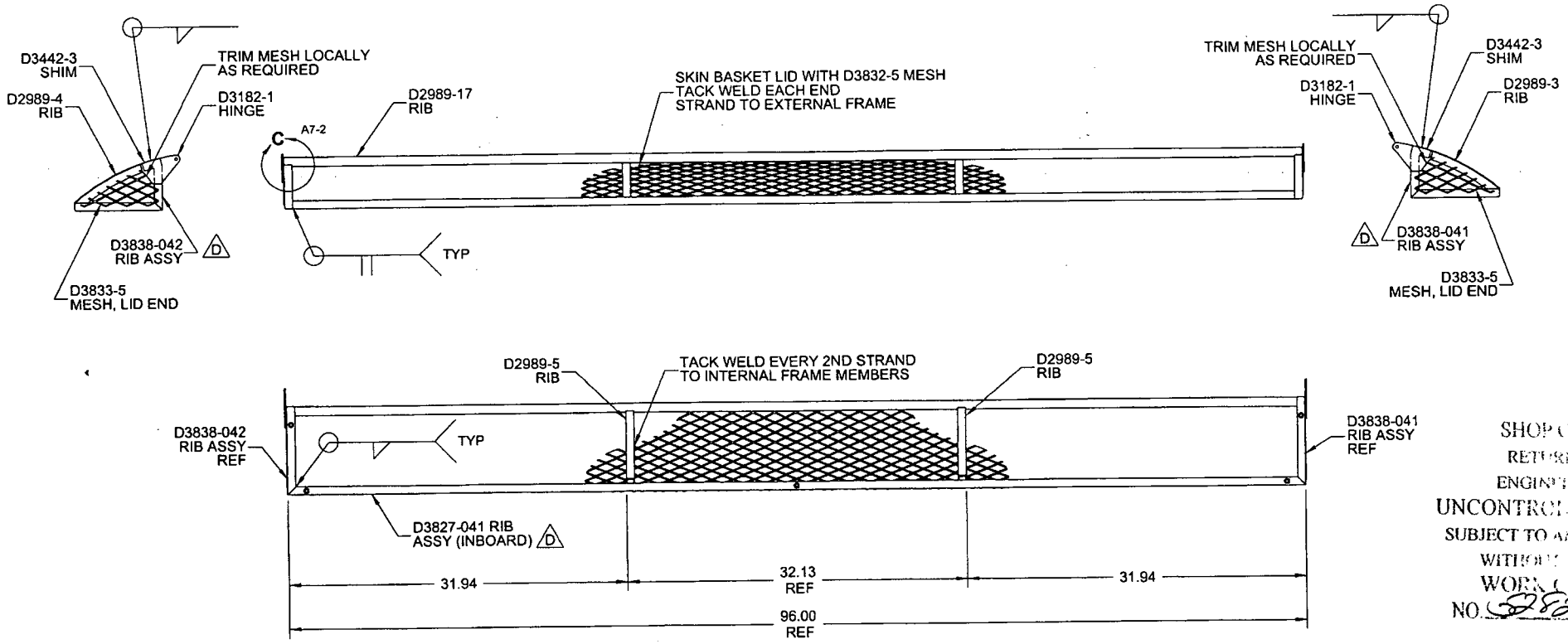

D2989-043 BASKET LID ASSEMBLY
(MESH SHOWN LOCALLY FOR CLARITY)

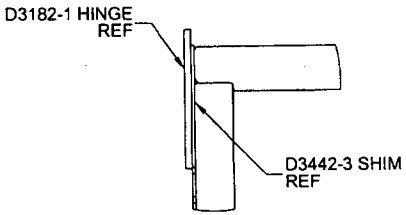

DETAIL C D7-2
TYP, SCALE 4X

SHOP COPY
RETURN TO
ENGINEERING
UNCONTROLLED COPY
SUBJECT TO ANY
WITHOUT NOTICE
WORK ORDER
NO. 52826

RELEASED
08/11/18

DESIGN	DS	**DART AEROSPACE LTD** HAWKESBURY, ONTARIO, CANADA
DRAWN		
CHECKED		DRAWING NO. D2989 — REV. D — SHEET 3 OF 5
MFG. APPR.		
APPROVED		TITLE: BASKET LID ASSEMBLY — SCALE: NTS
DE APPR.		
DATE	08.09.24	

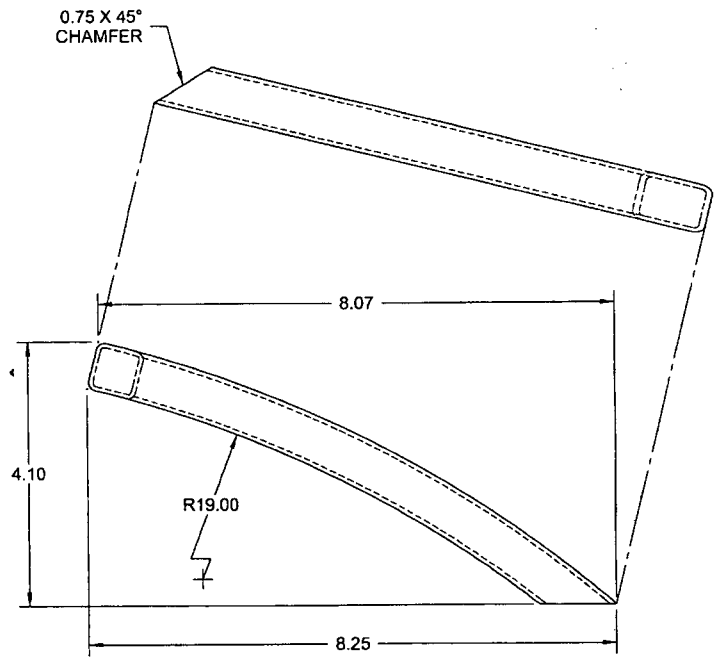

D2989-3 RIB

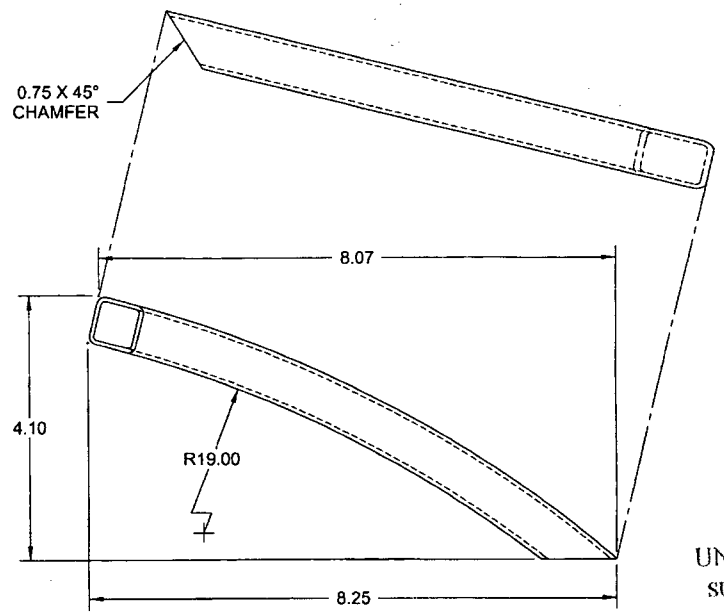

D2989-4 RIB

SH
RE
ENGINE
UNCONTRO
SUBJECT TO
WITHO
WOR
NO. 32824

RELEASED
08/11/18 NW

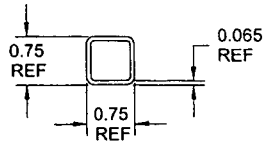

TYPICAL SECTION VIEW

OTES:
) MATERIAL: D3166-3 BASKET HOOP
) FINISH: NONE
) TOLERANCES: PER DART QSI 018 UNLESS OTHERWISE NOTED
) UNITS: INCHES UNLESS OTHERWISE NOTED
) BREAK SHARP EDGES: 0.005 TO 0.010 MAX
) IDENTIFICATION: N/A
) WEIGHT: D2989-3/-4 = 0.39 lbs;

DESIGN	DS	**DART AEROSPACE LTD** HAWKESBURY, ONTARIO, CANADA
DRAWN		
CHECKED		DRAWING NO. D2989 — REV. D — SHEET 4 OF 5
MFG. APPR.		
APPROVED		TITLE: BASKET LID ASSEMBLY — SCALE: NTS
DE APPR.		
DATE	08.09.24	

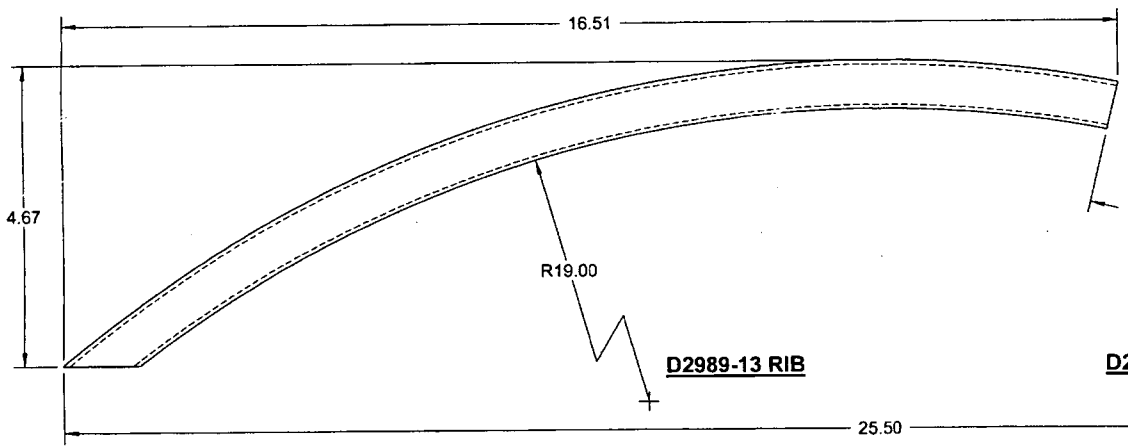

D2989-13 RIB

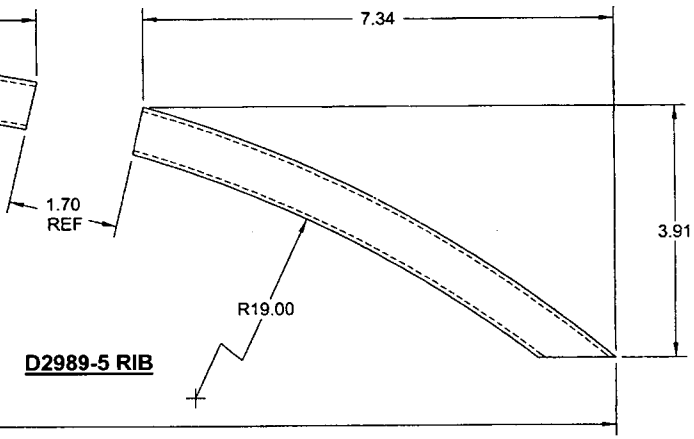

D2989-5 RIB

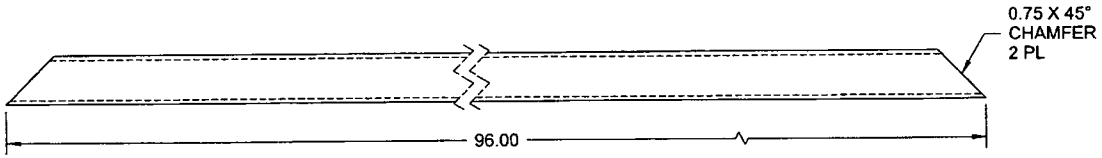

D2989-17 RIB

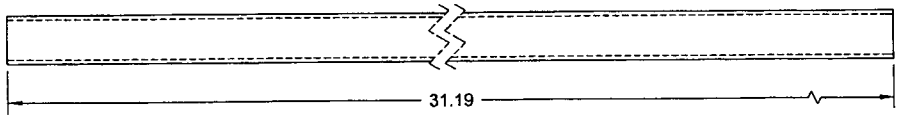

D2989-19 RIB

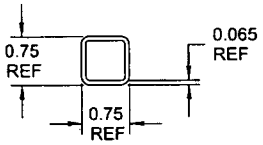

TYPICAL SECTION VIEW

RELEASED 08/11/18

NOTES:
) MATERIAL: AISI 304/316 STAINLESS STEEL SQUARE TUBE, 0.75 X 0.75 X 0.065 WALL
REF. DART SPEC. M304TS0.750W0.065
) FINISH: NONE
) TOLERANCES: PER DART QSI 018 UNLESS OTHERWISE NOTED
) UNITS: INCHES UNLESS OTHERWISE NOTED
) BREAK SHARP EDGES: 0.005 TO 0.010 MAX
) IDENTIFICATION: N/A
) WEIGHT: D2989-5 = 0.37 lbs; D2989-13 = 0.81 lbs; D2989-17 = 4.57 lbs; D2989-19 = 1.50 lbs

DESIGN	DS	**DART AEROSPACE LTD** HAWKESBURY, ONTARIO, CANADA
DRAWN		
CHECKED	DS	DRAWING NO. D2989 — REV. D — SHEET 5 OF 5
MFG. APPR.		
APPROVED		TITLE: BASKET LID ASSEMBLY — SCALE: NTS
DE APPR.		
DATE	08.09.24	